Model : PAC (Standard) SMALL, MEDIUM & LARGE THREE PHASE

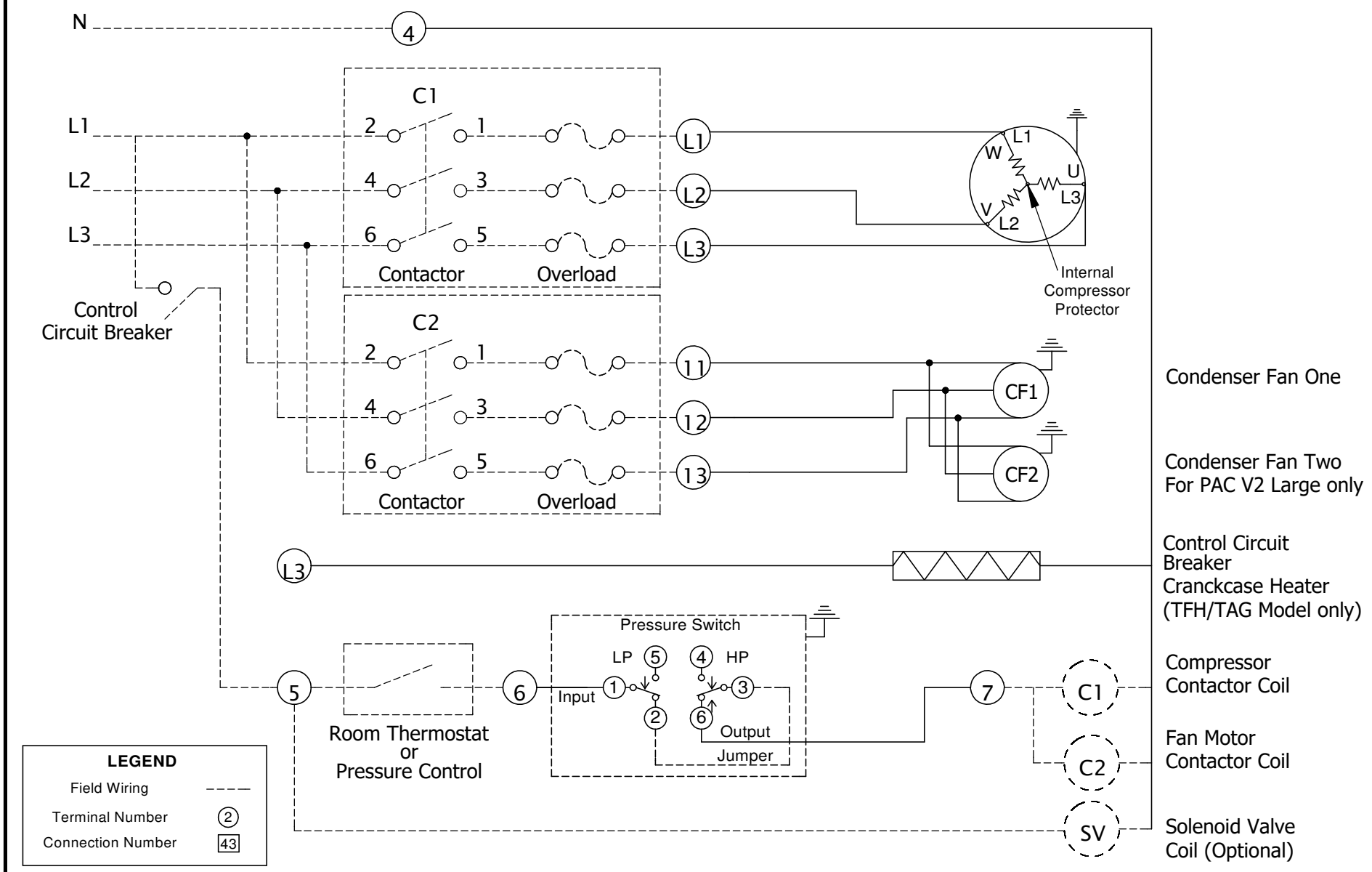

WARNING

THE ELECTRICAL CONNECTION OF THIS UNIT MUST BE PERFORMED BY QUALIFIED PERSONNEL AND MUST COMPLY WITH LOCAL ELECTRICAL STANDARDS

7684611	Index C